

MANTSINEN

MANTSINEN 300 HYBRILIFT®
BUILT FOR TOUGH TASKS



CONSIDER IT LOADED

Combining precision with efficiency, the Mantsinen multipurpose material handling machines are the perfect solution for various operations in ports and industrial terminals. They are suitable for handling any kind of bulk material, scrap, timber and breakbulk. Equipped with the Mantsinen quick coupling system, working with different attachments is easy, safe and efficient.

With more than 60 years of experience in logistics services for heavy industry, Mantsinen has the knowledge of the demands and challenges of material handling in many different applications. The combination of this operational experience and world-class engineering know-how create unique solutions for efficient handling operations. With our deep knowledge, we can optimise your operation and machine configuration.

LIFELONG PRODUCTIVITY

Mantsinen material handling machines Mantsinen material handling machines are a generational investment, in respect of the machine's life and durability. In many applications Mantsinen material handlers have reached over 50 000 working hours and still counting.

In-house manufacturing of the machines and attachments ensures high quality without compromise. All of the critical structures are thoroughly analysed using the finite element method based on strain gauge tests in real operation.

THE FASTEST WORK CYCLE

The Mantsinen 300 is second to none in efficiency, despite its massive size the machine is agile, precise and easy to control.

Mantsinen 300 material handler takes vessel loading and unloading operation efficiency to a whole new level. This enables the fastest work cycle in the market and the best productivity in its class.

The 300 is designed to meet the requirements of modern material handling and is capable of moving cargo up to Panamax class ships, but it can also handle heavy general cargo and containers.

Mantsinen 300 can handle fully loaded containers over 66 feet distance. This makes Mantsinen the most efficient container handler at this reach, in quays and terminals. Despite its massive size, Mantsinen 300 is just as agile and precise as any smaller material handlers.



RED MACHINES CREATE
ENVIRONMENTAL VALUE

For more than two decades, Mantsinen has paved the way in energy-saving innovations and sustainable solutions.

BREAK-THROUGH DUALPOWER TECHNOLOGY

Why Choose? Get Both. Mantsinen DualPower is the first ever dual power concept in material handlers. It combines the best features of both electric motors and diesel engines. Resulting in a union of mobility, productivity and advanced environmental friendliness.

The Dualpower technology combines the benefits of an electric machine and the versatility of a diesel machine.

The electric motor offers significantly lower energy and maintenance costs without diesel exhaust emissions and reduced noise emittance. The standard high-performing electric motor and the diesel engine are located side-by-side in the shared engine compartment.

The system is based on a dual motor interface pump gear. The power source can be switched easily with a separation clutch.

GET ELECTRIC

The electrically powered machines offer a cost effective and ecological alternative to diesel powered machines. They provide the same performance level, with zero exhaust emissions, a low noise level and lower energy and maintenance costs. The E-series machines are available configured for local voltages upon request.

DualPower™
BY MANTSINEN



ENERGY-EFFICIENT, YET EFFICIENT

We believe in increasing productivity by the means of efficiency. We can lower maintenance costs and increase production yields per unit of input. Improvements in operation and process reliability can also lead to reductions in equipment downtime, shutdowns or system failures.

INNOVATIVE AND UNIQUE ENERGY STORAGE AND RECOVERY SYSTEM

Mantsinen begun the testing and development of the Hybrilift already in 2006. The Mantsinen Hybrilift® energy storage and recovery system decreases energy consumption and costs up to 50 %. With Hybrilift, the energy created by lowering of the booms is accumulated and reused, which significantly reduces the fuel consumption and emissions. Once the main boom is lowered, oil is pumped from a cylinder to pressure accumulators where the gas pressure increases, and energy is accumulated.

This stored energy is used to raise the boom and stick. More load will be lifted with less energy. Mantsinen Hybrilift material handlers have smaller diesel engines or electric motors as their traditional counterparts. This improves fuel economy and lowers emissions, as well as reduces service costs.

The patented Mantsinen 300 HybriLift system is unique in its design. The two HybriLift cylinders are connected with pull rods to the far end of the main boom. This arrangement greatly reduces stress on the boom. Additionally, as the HybriLift cylinders work in the opposite direction from the main cylinders, the stress on main boom pins and upperstructure is significantly reduced.



EVERYTHING UNDER CONTROL



MANTSINEN CONTROL SYSTEM (MCS)

The Mantsinen control system is engineered for cost-efficient material handling with today's technology. Its operator friendly user interface runs under an "Only what's important is shown" approach making daily operations easier, while allowing the operator to concentrate on their current task. The adjustable multi-function joysticks for front equipment are extremely ergonomic and comfortable. Electrically controlled proportional functions ensure smooth and efficient operation under all conditions.

Travel and steering are controlled by a onegrip joystick. Rail-mounted machines are driven by pedals. The system has electric end cushioning for the boom, the stick and the cab elevator to avoid unpleasant dynamic shocks.

HUMAN-MACHINE INTERFACE

- A Graphic user interface display
- Easy-to-use multifunction control jog
- Operating data and gauges
- Optional functions state information
- On board and remote diagnostics with detailed error description
- Acoustic signal for critical alarms
- Precision mode and heavy lift mode
- Settings for main functions and options
- Error logging
- Instantaneous power consumption measurement
- Periodic fuel or electric power consumption

CONTROL SYSTEM	STANDARD	OPTION
Auto-idle mode	•	
Heavy lift mode	•	
Accuracy mode	•	
Dead man switch on joysticks		•
Automatic clamshell bucket levelling while closing		•
Anemometer with alarm at 82 ft/s, slowdown 98 ft/s		•
Semiautomatic work cycles		•
Temporary person lift prep		•
Turbo timer		•
Vertical lift		•
Container handling mode		•

SAFETY WITHOUT COMPROMISES

MANTSINEN SAFETY SYSTEM (MSS)

Mantsinen machines come equipped with an advanced safety system as a standard. Front equipment, swing and cab elevator are equipped with sensors ensuring online monitoring of the machine operation.

The system includes an overload and stability control, as well as cabin collision prevention with warning and automatic motion cut-off functions. Load, reach and height information is provided with animation of the machine's real time operation. The attachment menu is a part of the system as well.

The system also enables various advanced features like maximum and minimum operational heights, vertical lift, automatic bucket levelling and load cycle history monitoring.





Machine history

Resale

Service history

Productivity improvement

Machine reports

Immediate data

LEAD BY DATA

MANTSINEN INSIGHT™

MANTSINEN INSIGHT™ provides comprehensive information from individual material handling machines to a complete fleet. By following over 150 outputs per machine we will ensure that you keep track of your operations, on-site and remotely – wherever you are. With Insight, you will improve your performance and remain at the leading edge of your business.

MANTSINEN INSIGHT™ enables data storing automatically with access to operational and service information. Insight offers data storage, making the machine's history easily available when needed. In addition to remote machine monitoring, Insight enables a connection to the machine control system as standard. These features combined with the onboard diagnostics ensure the best possible support for all machine-related needs.

MANTSINEN INSIGHT™	STANDARD
Asset reports	•
Productivity/efficiency views	•
Fleet view	•
Visualized sensor data	•
Upcoming services -tool	•
History data	•
Data for dealer/factory support	•
Control system remote access for factory support	•
Global SIM card	•

STRENGTH IS NOTHING WITHOUT VISION

STAINLESS STEEL CABIN

The spacious and modern operator's cabin has excellent visibility with a large one-piece curved windshield and floor window eliminating obstructions in the operator's view. The cabin is made of stainless steel for long lifetime even in the most demanding or corrosive working environments. Sound insulation, low vibration and high-quality interiors create the most comfortable and ergonomic environment for the operator.

The powerful heating and air conditioning, tinted windows and adjustable sunshades make the cabin comfortable in all weather conditions. The windshield wiper has two speeds, an adjustable intermittent function and a washer. There is also a wiper for the skylight.

The operator works in an ergonomically designed environment. All joysticks, control panels and user interface displays can be easily controlled and operated.



VISIBILITY FROM CABIN

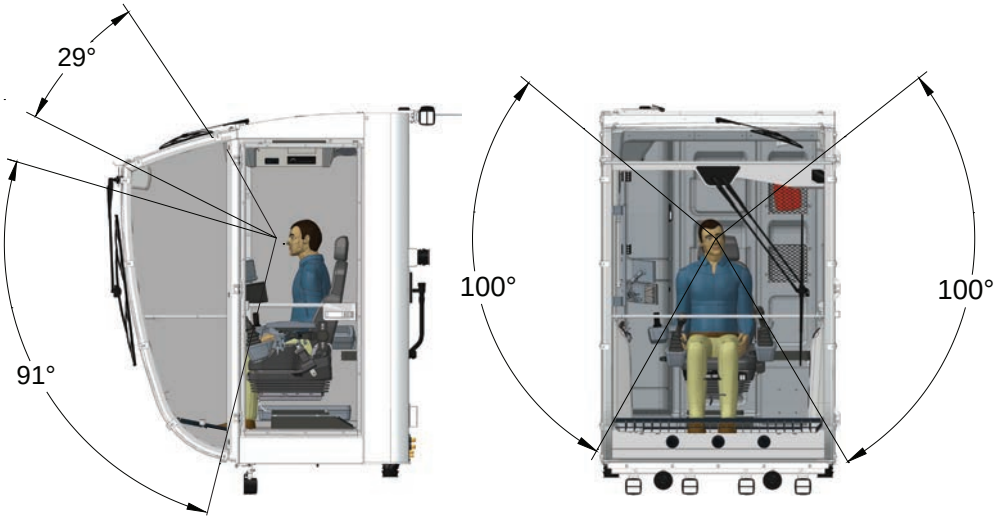

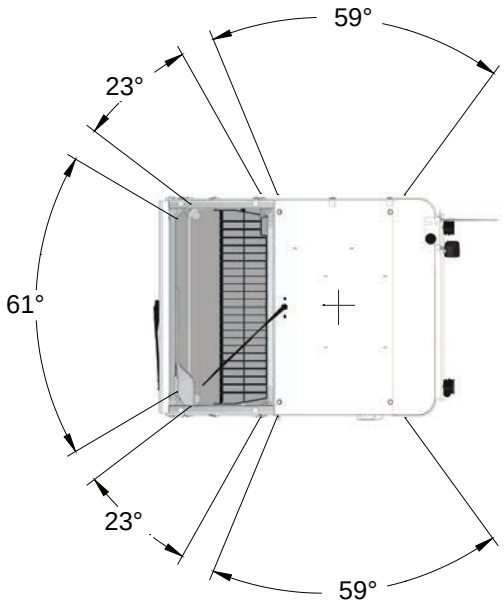

CABIN ELEVATORS

Mantsinen 300 HybriLift® has three cab elevator options. Robust Mantsinen N2-6000 or N2-5000 cab elevator features independent vertical and horizontal movement to position the operator for maximum visibility of loading targets. One arm cab elevator N1-3000, simply brings operator high up.

N1-3000

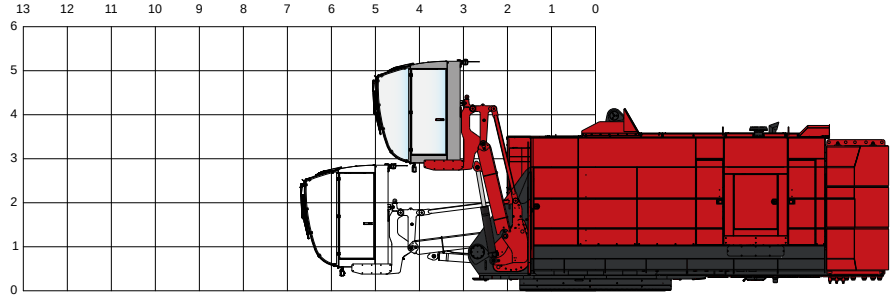

N2-6000, N2-5000

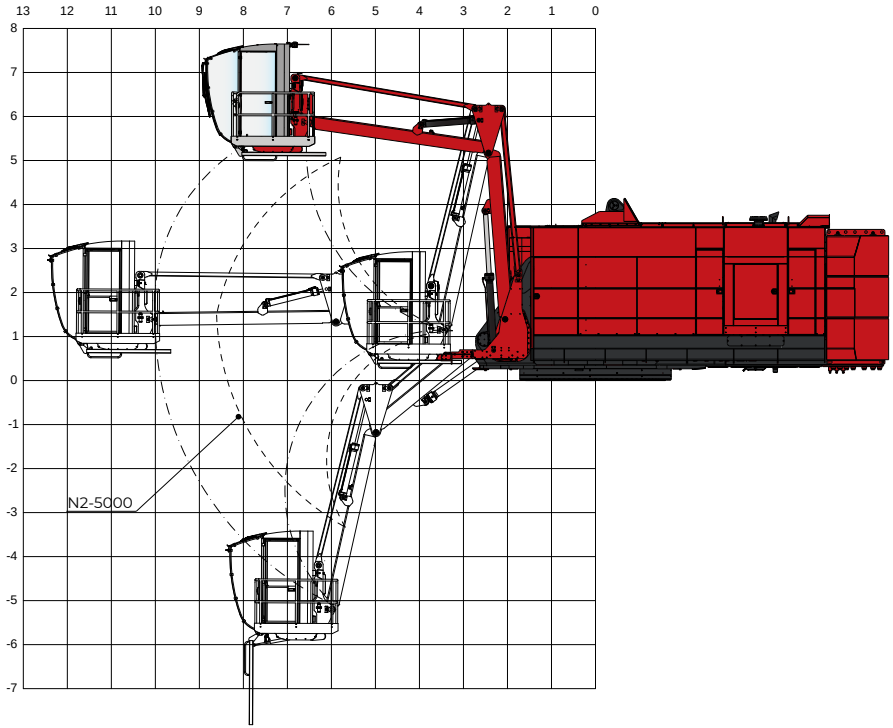

FIXED CABIN POSITIONS

Mantsinen 300 HybriLift® has three fixed cab positions.

FIXED CAB POSITION 1.

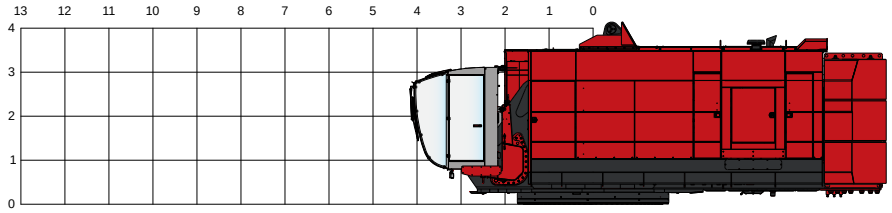

FIXED CAB POSITION 2.

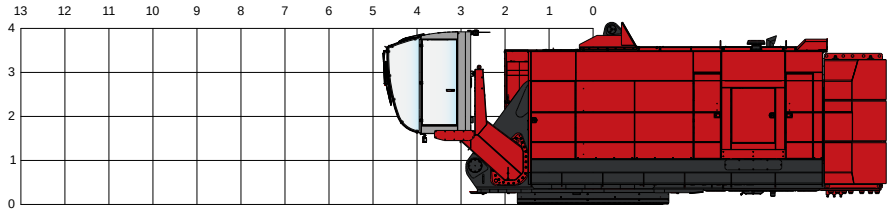

FIXED CAB POSITION 3.

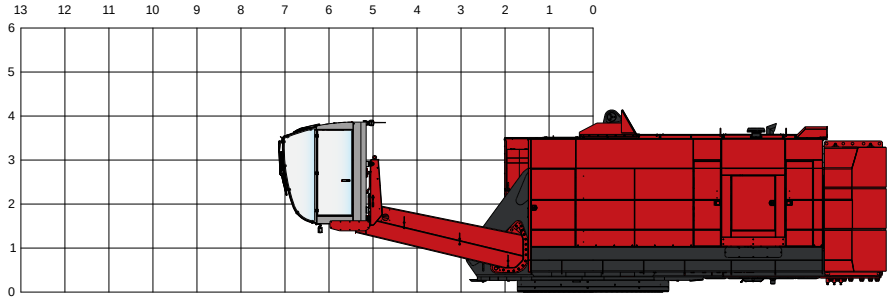

CABIN EQUIPMENT AND OPERATOR'S SEAT	STANDARD	OPTION
Automatic heating and air conditioning with defrost	•	
One-piece curved windshield with heating	•	
Skylight	•	
Tinted window glasses	•	
Sunshades	•	
Folding instructor seat with seatbelt	•	
Signal horn	•	
Rear view mirror	•	
Rescue harness and first aid kit	•	
Bluetooth CD/USB, MP3/WMA receiver	•	
Cup holder	•	
Literature compartment	•	
Two 12 V plugs for chargers	•	
Standard seat	•	
- Air suspension	•	
- Automatic weight adjustment	•	
- Seat belt	•	
- Heating	•	
- Fully adjustable	•	
Seat Be-Ge 3110 FC4 Airvent		•
Seat turntable		•
Cabin protection guards, windshield and skylight		•
Impact proof windshield		•
Sun protection foils, all windows except skylight		•
Emergency exit beam on top of cabin		•
Loudspeaker with gooseneck microphone and pedal		•
VHF-phone preparedness, microphone, pedal and harness		•
230 V AC socket in diesel machine cabin, max current 30 A		•
Alco lock system with SMS function		•
Additional air filtration unit including cabin pressure control		•
Camera with display. Stick or rear-view camera		•
Stick, rear-view and right-view cameras with shared display		•
Camera recording system		•
WiFi camera		•

DEVELOPED TO GET THE JOB DONE

UPPERSTRUCTURE

The Mantsinen upperstructure is specifically designed for fast and harsh material handling applications. In-house experience of hundreds of millions of tons in material handling provides a strong base for design, functionality and serviceability.

POWERLINE

Volvo Penta diesel engines are known in the material handling industry for their high performance, low fuel consumption and durability. The engine, or electric motor is located in a sound-proofed compartment. The doors ensure easy access to service on both sides.

HYDRAULICS

The main hydraulics consist of four variable displacement axial piston pumps and a closed-loop swing pump. There is a separate circuit for the rotator, cab elevator and optional attachment functions as well as for fans. Efficient filtration and a three-micron bleed-off fine filter with water absorption ensures continuously clean and dry oil, which increases uptime and extends component and oil lifetime.
The hydraulic oil cooler and the radiator are easily accessible for cleaning from the service platform. The fan reversal function cleans the cooler and radiator without interrupting the machine's operation.

RIGID MAIN FRAME

The rigid main frame and the large diameter pins guarantee a long lifetime for the machine. Robust frames provide solid basis also for slew ring.

SWING MECHANISM

The Mantsinen 300 has a large-diameter heavy-duty, three-row roller-type slewing ring with internal teeth running in a grease bath. Two heavy planetary swing gears have integrated automatic multi-disc brakes. The closed-loop swing hydraulic circuit operating with state of-the-art electric control system ensures an extremely smooth and controllable swing. The closed-loop swing system saves a considerable amount of energy and provides maximum operating performance.

SERVICE WALKWAYS ALSO INSIDE

The wide inside and outside service walkways satisfy international safety standards, providing unrestricted and safe access to all service points.

FRONT EQUIPMENT

A range of straight or curved booms, as well as different boom and stick lengths are available to optimize the operation for maximum productivity. Mantsinen boom and stick structures are designed and analysed with modern FEM-methods based on real operation measurements and long-term practical experience. Their minimum expected lifetime is over two million work cycles under maximum load. Booms and sticks are manufactured in-house under close quality supervision to ensure a long lifetime for these structures.

MAIN BOOM

The main boom foot and bosses are constructed from steel castings, providing an excellent service life to one of the most critical structural components of the machine. The optimised box structure ensures maximum lifetime without compromise. Strong structure and large pin diameters minimise surface pressures and wear on bushings.

STICK

The stick box is constructed from four C-profiles using high tensile steel. The design allows the stick to be constructed with no welding seams in high-stress areas, making it light and extremely durable. Hydraulic lines are well protected inside a U-channel on the sides of the stick. As a consequence of the unique cast stick tip and link design, attachment hoses are not exposed for damages.

OPTIONS AND STANDARD FEATURES

EQUIPMENT	STANDARD	OPTION
Working lights, operational output 4200 lm, 24 V LED; 4 underneath of cabin, 4 at stick, 1 on cab roof	•	
Central lubrication for front equipment and slewing ring raceway	•	
Central lubrication for mobile undercarriage	•	
Bleed-off fine filter	•	
Second pressure adjustment for attachments 3626 psi	•	
Beacon and acoustic travel alarm	•	
Surface treatment for C4 Medium according to ISO 12944-2	•	
User and service manuals, 2 printed, 2 on memory sticks	•	
Electronic spare part catalogue, 2 on memory sticks (English)	•	
HYDRAULICS		
Additional attachment function, 2901 psi, 24 gal/min		•
Second additional attachment function, 2901 psi, 24 gal/min		•
Magnet generator system 30 kW		•
Magnet generator system 40 kW		•
Additional undercarriage hydraulic function with pedal		•
Biodegradable hydraulic oil		•
FILTRATION		
Large by-pass fine filter with water absorption		•
Attachment line filters		•
Additional fuel filter with heating		•
LUBRICATION		
Automatic lubrication system up to link		•
Automatic lubrication system up to attachment		•
LIGHTS		
Additional 2 lights on boom		•
Undercarriage lights, one in each direction, totally 4		•
Undercarriage pad lights, one directed to each pad, totally 4		•
Travel lights for public roads		•

HEATING	STANDARD	OPTION
Electric heating for engine, hydraulics and cabin. 3-phase inlet socket		•
Automatic battery charger		•
Heating cable 82 ft spring reel		•
Pre-heater for engine and cabin, by fuel. Including Multicontrol timer		•
REFILL		
Refuelling pump with 5 m suction hose, 24 V or hyraulic		•
Re-fuelling line 2” from ground level		•
AdBlue 24 V refill pump, harness, pistol & 15 m hose reel for IBC-container		•
GENERAL		
Fire suppression systems		•
Safety access gate, doorbell + operator openable electric lock		•
NATO jump start plug		•
Emergency stops in undercarriage, 2 pcs		•
Pull coupling		•
Stick corner covers, 4 pcs		•
Stick cover against grapple hits		•
Service lift SWL 1100 lbs, 16 ft swing beam, electric 230VAC.		•
Toolbox in undercarriage, aluminium		•
BACK UP SYSTEMS		
Portable hydraulic unit for swing, main boom, stick, electric or engine driven		•
Diesel powerpack Mantsinen 100 for travel with remote control		•
Lift cylinder and swing release kit		•
SURFACE TREATMENT OPTIONS		
C5 Medium, main component exterior surfaces		•
Customer stickers		•
Custom colour: Front equipment, cover panels, counterweight, cab elevator		•

MANTSINEN 300R

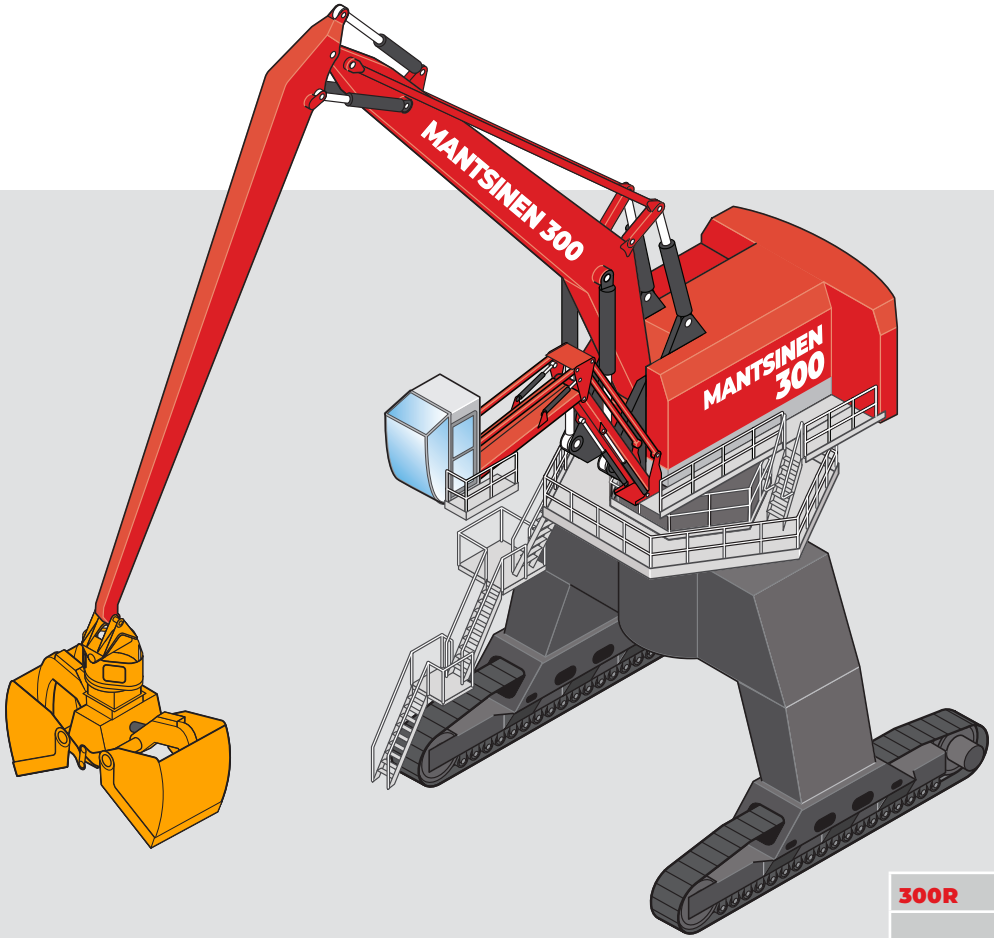

Long and widely apart tracks and rigid box type frame create an excellent stability foundation for the machine. The flat track shoes run smoothly on gravel, asphalt or concrete. Hydrostatic track drive consists of two speed axial piston travel motors and planetary trackdrives. There are spring applied multidisc automatic brakes with hydraulic release.

CRAWLER GANTRY

Crawler gantry provides logistic freedom by allowing trucks or railcars pass through the crane. Additionally the machine cycle time and truck waiting times can be minimised due to the optimised swing angle.

300R		
	CRAWLER UNDERCARRIAGE	**CRAWLER GANTRY UNDERCARRIAGE**
Undercarriage heights	10 ft, with pylon 13 / 15 / 17 / 19 / 22 / 27 ft	26 / 30 ft, with pylon 30 / 34 / 37 / 38 / 42 / 43 ft
Track gauge	30.2 ft	30.2 ft
Track length	32.8 ft	32.8 ft
Track shoes	3.9 ft flat	3.9 ft flat
Travel speed	Max 1 mph	Max 1 mph
OPTIONS		
Additional fuel tank	1 x 793 gal or 2 x 793 gal	1 x 793 gal or 2 x 793 gal

Robust and proven undercarriage versions are designed for every demand and conditions. Stability and robust design are the key features in all the Mantsinen undercarriages. All the machines are able to operate 360° with full load.

MANTSINEN 300M

The robust six-axel solid tyre mobile undercarriage provides great mobility in this machine size. Three-axle drive and all wheel steering provides a good drawbar pull and facilitates operation on uneven surfaces. There are hydraulic wet disc service brakes and spring-applied multidisc parking brakes on the driven axels. Simultaneously or individually controllable outriggers permit stable 360° operation with full loads even in demanding conditions. Outrigger cylinder protection as well as automatic undercarriage lubrication are included as standard.

MOBILE GANTRY UNDERCARRIAGE

The Mantsinen 300 mobile gantry undercarriage combines great mobility and logistic freedom by allowing trucks or railcars pass through the crane. Also the cycle time can be minimized due to the optimised swing angle. The Mantsinen 300's mobile gantry has a box type rigid gantry frame. Twelve independently hydraulically suspended and steered oscillating axle units are standard features and enable crab drive mode and lateral drive mode. The twelve-wheel hydraulic drive has been implemented with variable displacement axial piston motors. Driven axels are equipped with hydraulic wet disc service brakes. Automatic levelling with 4-point hydraulic stabiliser cylinders as well as automatic undercarriage lubrication are included as standard features.

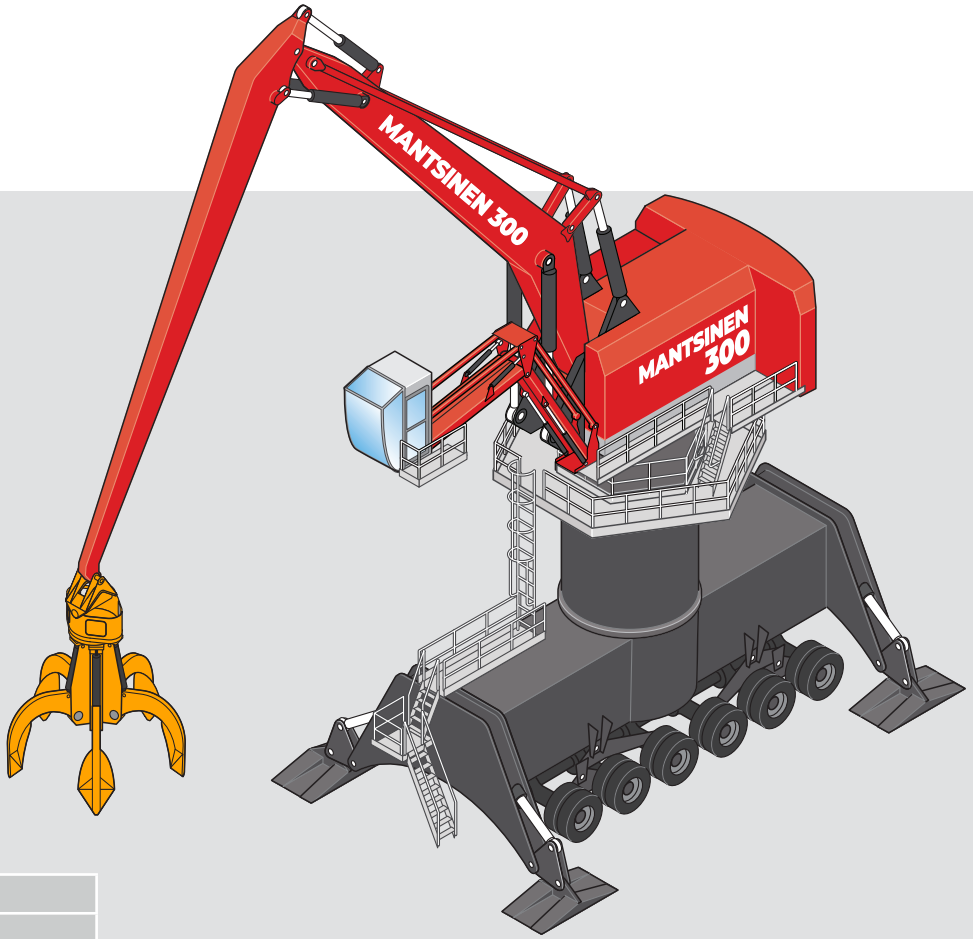

300M		
	MOBILE UNDERCARRIAGE	**MOBILE GANTRY UNDERCARRIAGE**
Undercarriage heights	14 ft, with pylon 17 / 19 / 21 / 23 / 26 ft	26 / 30 ft with pylon 33 / 37 / 38 / 42 ft
Tyres	24 × 16.00-25 solid rubber	24 × 16.00-25 solid rubber
Drive speed	Max 2 mph	Max 2 mph
Stabilizer pads (w x l)	6.6 x 13.1 ft	6.6 x 13.1 mm
OPTIONS		
Large Pads (w x l)		2 x 6.6 x 9.8 ft
Additional fuel tanks	1 x 793 l, 1 x 1321 l (with pylon only)	1 x 793 l

Undercarriages are available in several different heights to optimise the operation, reach and visibility. Mantsinen organization can provide ground pressure information and operational drawings case by case.

MANTSINEN 300S

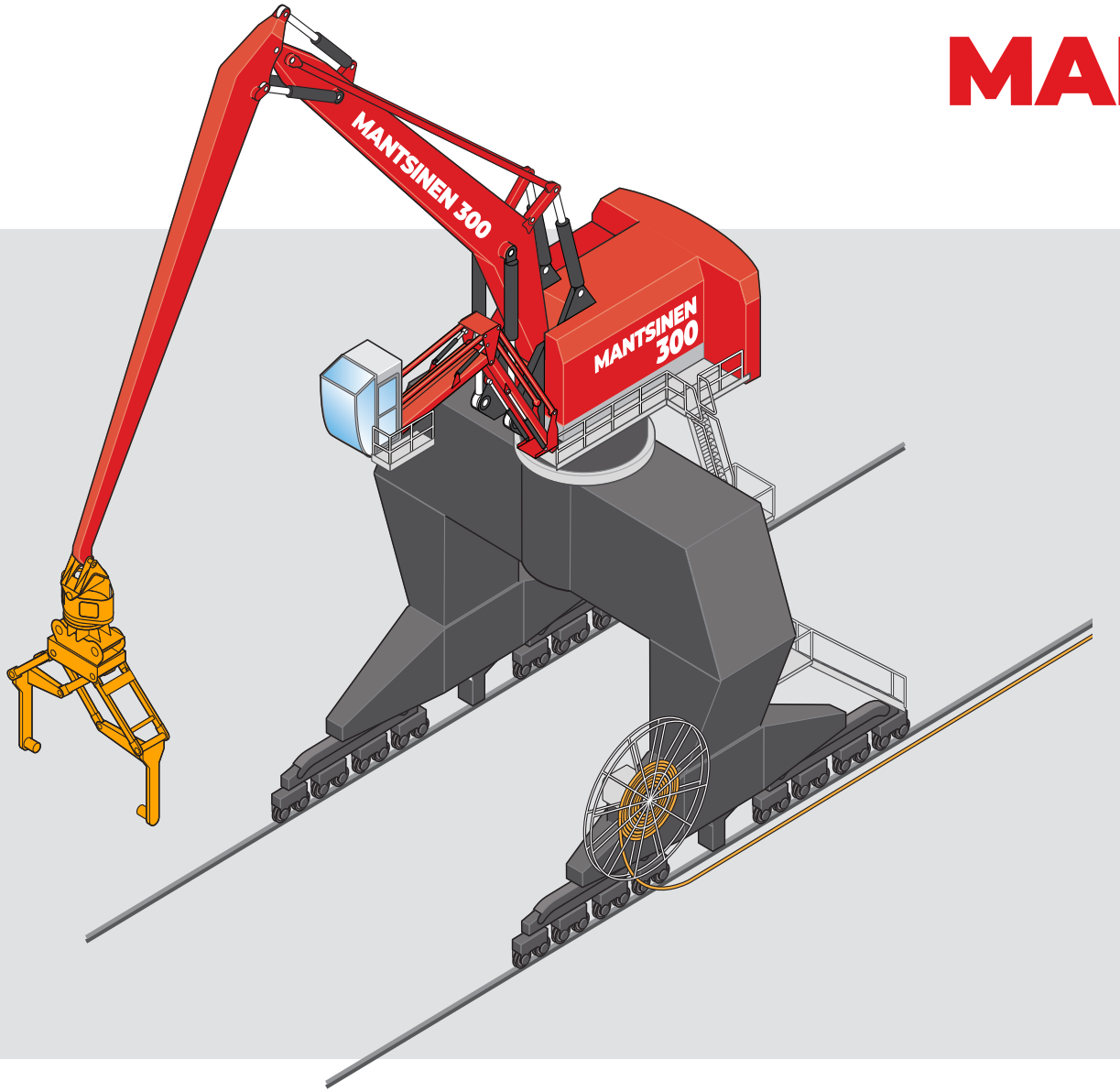

RAIL MOUNTED

A Rail undercarriage can be tailored around existing rails. Both the wheel diameter and number of wheels can be optimized to match permissible wheel loads. There are Ø 15” and Ø 25” wheel options available for various rail profiles. Hydraulic planetary wheel drives provide smooth travel and keep the machine steady throughout operation. The machine can be easily adapted to pull a hopper on rails. Rail cleaners, buffers and storm brake are all available as options. Depending on the gantry width the undercarriage allows one or more railcars or trucks to pass through. Both diesel and electric versions are available for rail mounted machine.

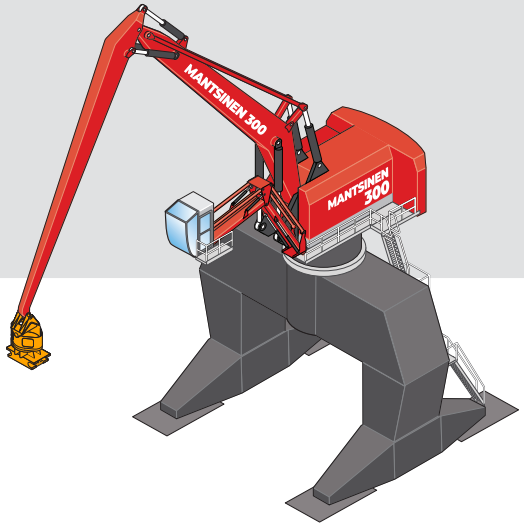

FIXED

An electric or diesel powered machine can be installed for static operations on shore or alternatively on a pontoon or ship. Fixed installation can be delivered with different portal structures.

TECHNICAL SPECIFICATIONS

FRONT EQUIPMENT		
BOOM STRAIGHT OR CURVED (ft)	**STICK (ft)**	**HORIZONTAL REACH (ft)**
47.6	36.1	83.7
47.6	39.4	86.6
50.9	42.7	93.2
54.1	45.9	99.1
57.4	49.2	105.3
60.7	52.5	111.6
64	52.5	114.8
70.5	55.8	123.7
70.5	59.1	127.3

DIESEL ENGINE	
Volvo Penta	TAD1643VE 565 kW Stage II /Tier 2 TWD1683VE 585 kW Stage V / Tier 4f
Displacement	982,5 CID
Number of cylinders	6
Electric system	24 VDC, alternator 150 A / 24 V, batteries 2 × 225 Ah / 12V
ELECTRIC MOTOR	
Motor type	355 kW IEC cast iron frame squirrel cage motor, 1500 rpm / 50 Hz, 1800 rpm / 60 Hz
Voltages	380 to 690 V. Medium voltages upon request with transformer

HYDRAULIC SYSTEM	
HybriLift® energy recovery system	Equivalent to 500 kW engine power
Oil flow, front equipment and travel	4 × 111 gal/min
Operating pressure, front equipment	4786 psi
Operating pressure, travel and Heavy Lift mode	5221 psi
Oil flow, swing	143 gal/min, closed loop system
Operating pressure, swing	5076 psi max
Max swing speed	4,0 rpm max
Swing torque	625 kNm

REFILL CAPACITIES	
Hydraulic oil	528 gal net volume
Fuel tank	793 gal
Engine oil	12.7 gal
AdBlue tank	42.3 gal for Stage V / Tier 4f diesel



Specifications subject to change without prior notice. The photographs and/or drawings in this brochure are for illustrative purposes only. Refer to the Operator's Manual for instructions on the proper use of this equipment.

MAIN DIMENSIONS FOR 300M

MOBILE UNDERCARRIAGE

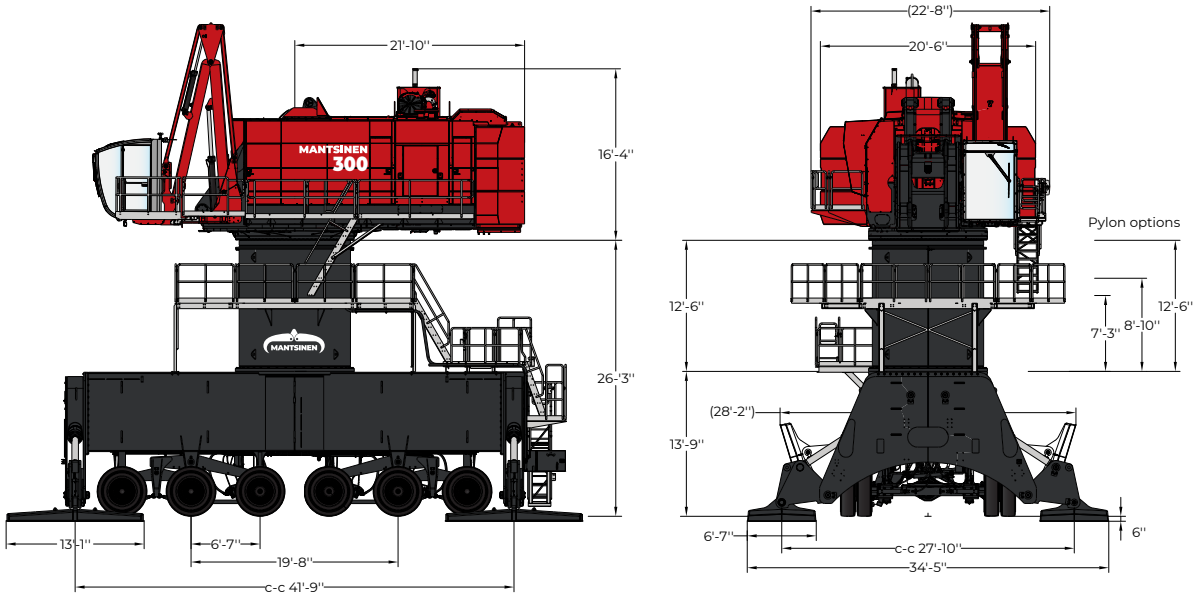

TURNING RADIUS FOR MOBILE UNDERCARRIAGE

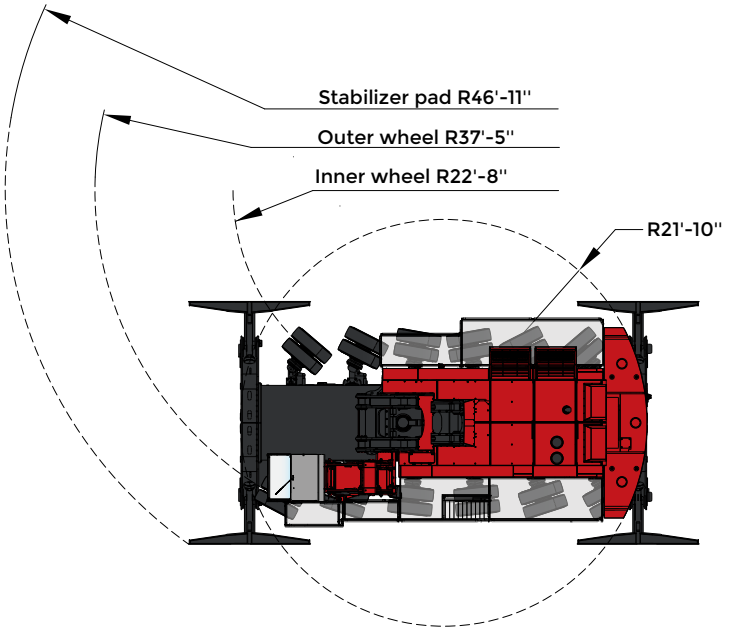

MOBILE GANTRY UNDERCARRIAGE

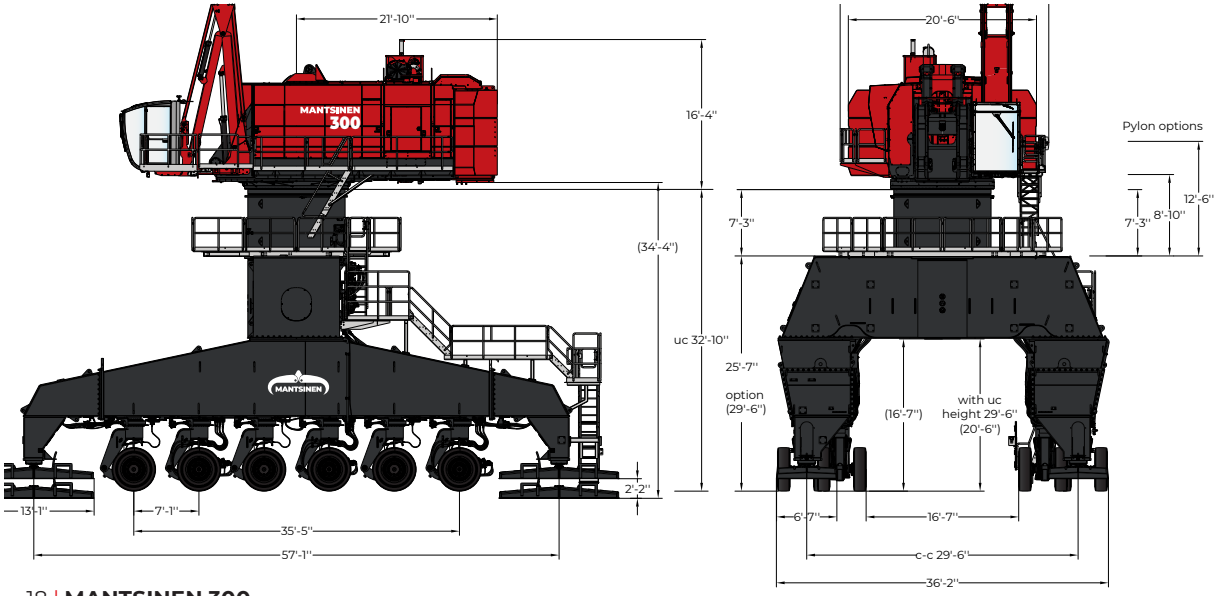

TURNING RADIUS FOR MOBILE GANTRY UNDERCARRIAGE

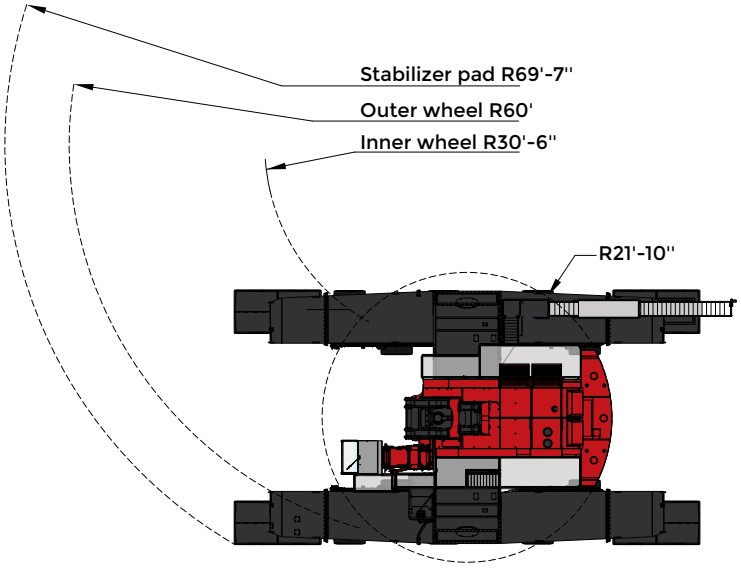

MAIN DIMENSIONS FOR 300R

CRAWLER UNDERCARRIAGE

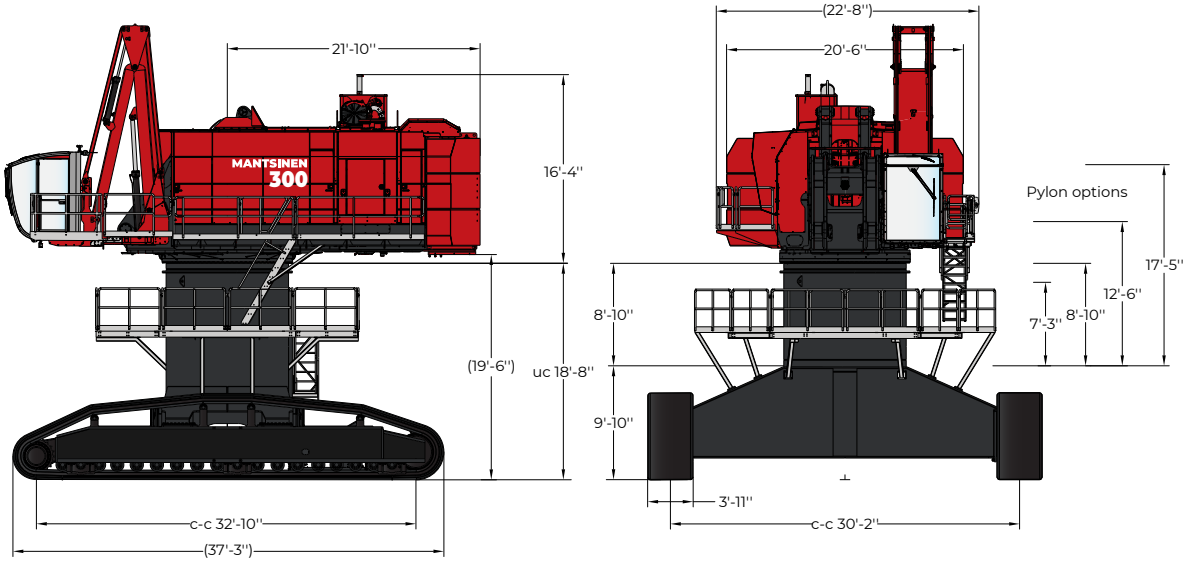

CRAWLER GANTRY UNDERCARRIAGE

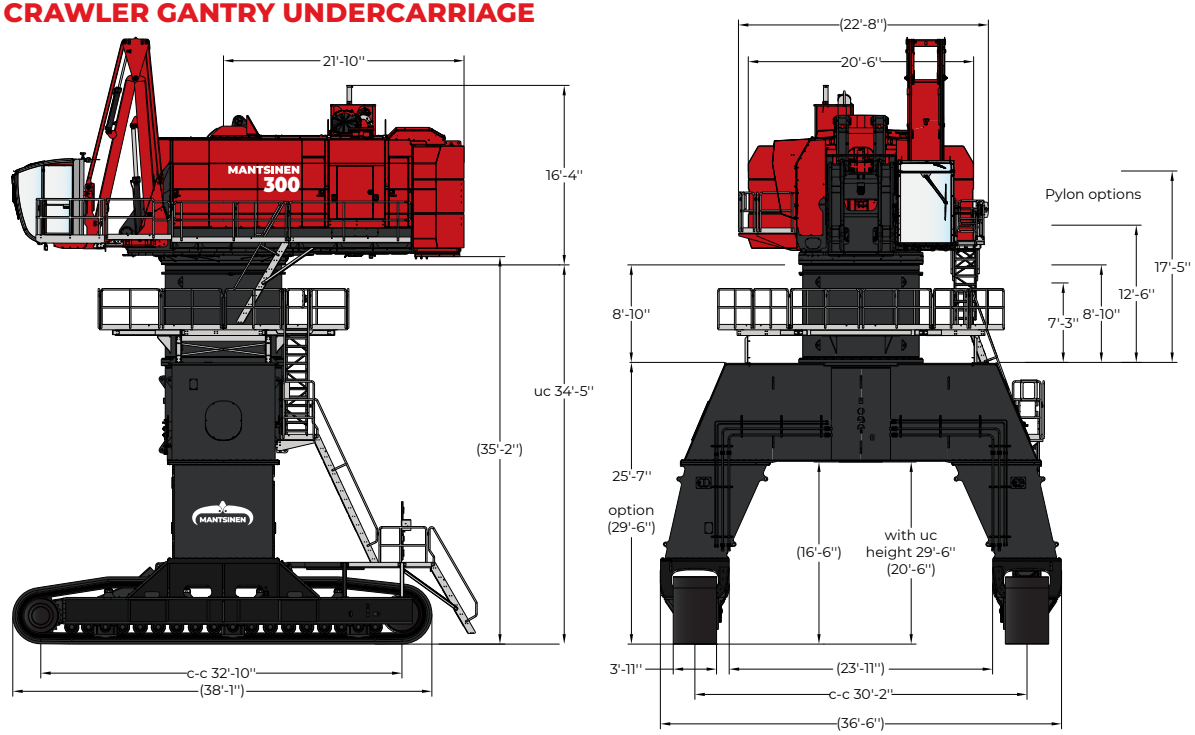

REACH FOR PRODUCTIVITY

MANTSINEN 300 HYBRILIFT®

Contact your Mantsinen representative for specific load diagrams for your operation.

Lifting capacity range with 70.5 ft curved main boom
and 59.1 ft stick

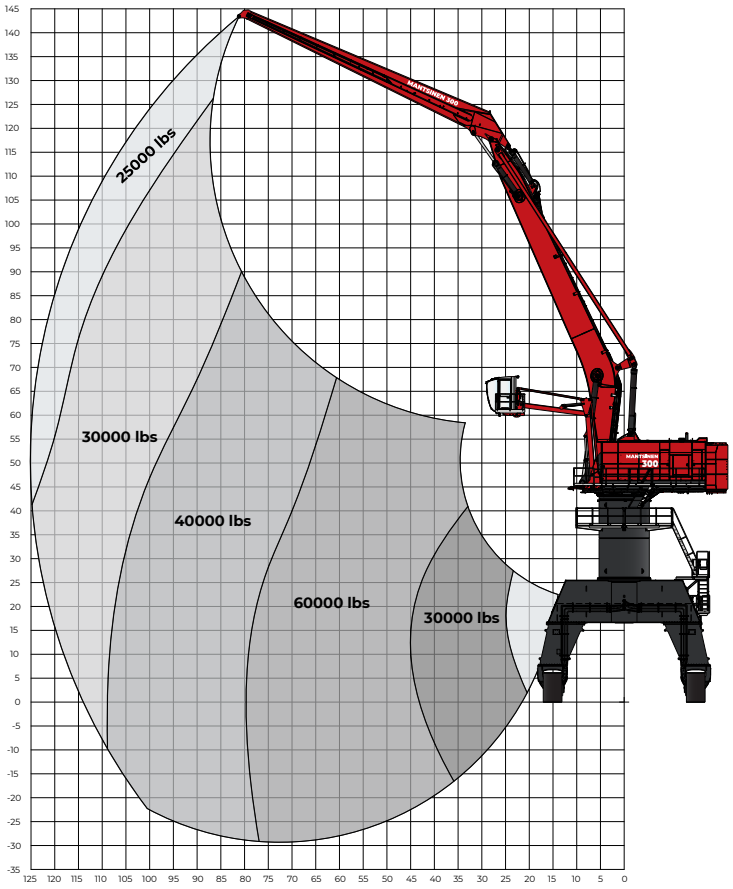

Lifting capacity range with 57.4 ft curved main boom
and 49.2 ft stick

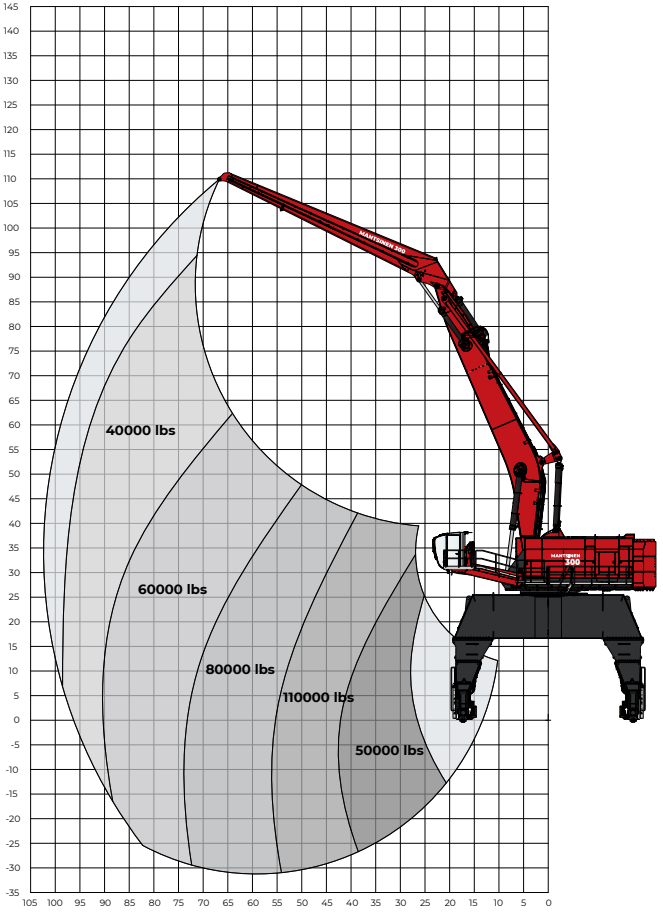

HEAVY LIFT
Lifting capacity range with 50.9 ft curved main boom
and 42.7 ft stick

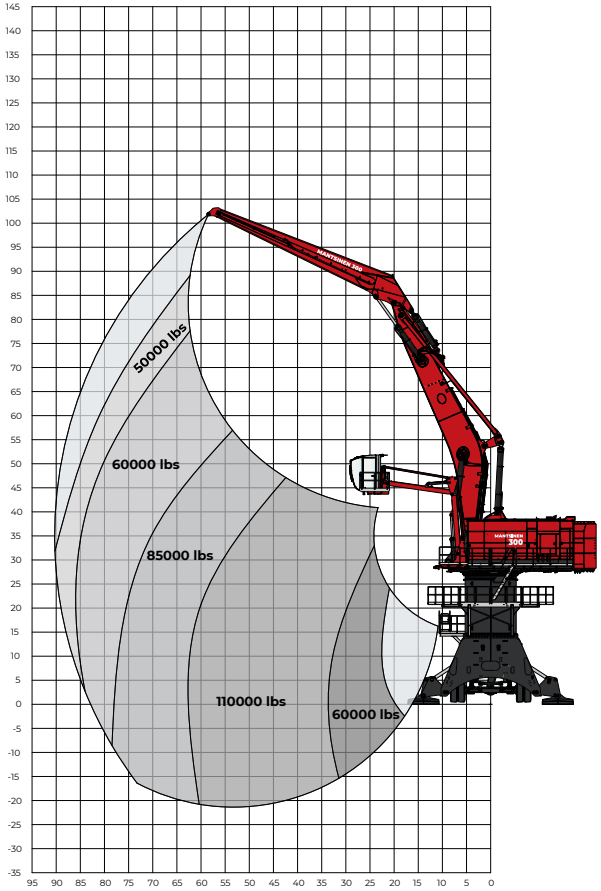

VERTICAL LIFTING RANGE (METERS)

HORIZONTAL LIFTING RANGE (METERS)

REACH WITH DIFFERENT BOOM AND STICK CONFIGURATIONS WITH 34.5 FT UNDERCARRIAGE

CURVED BOOMS

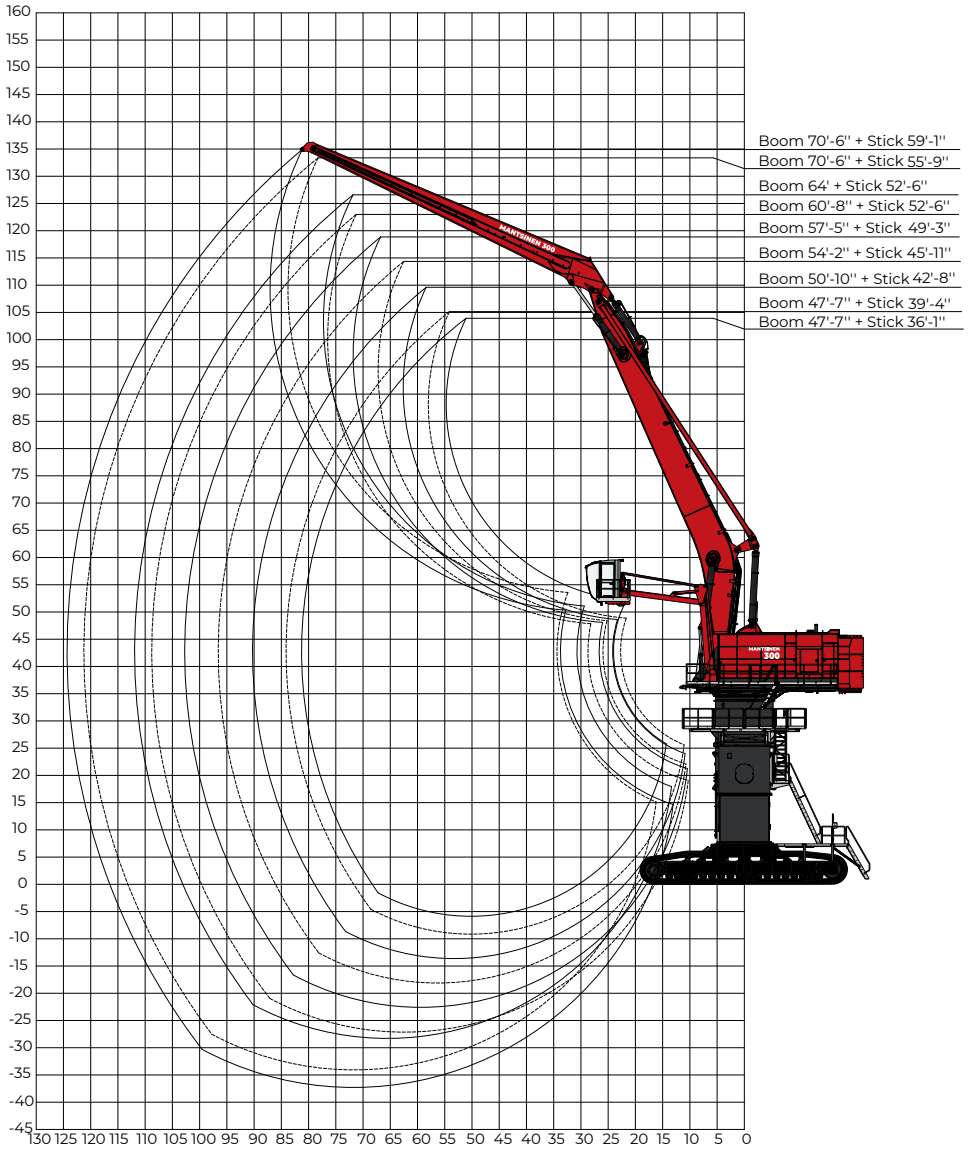

STRAIGTH BOOMS

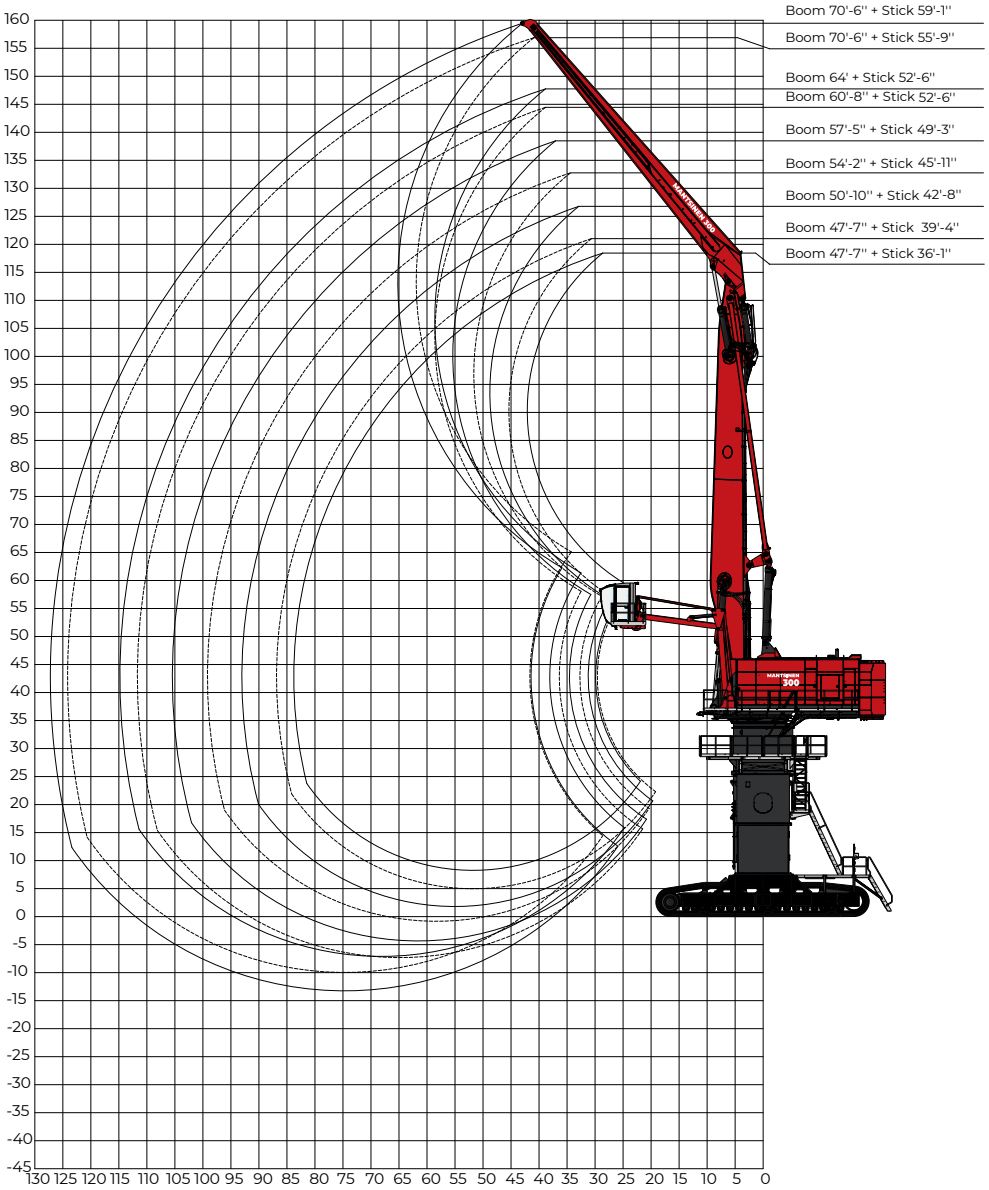

MAXIMUM PRODUCTIVITY

ALWAYS THE RIGHT ATTACHMENT FOR THE JOB

Mantsinen offers a wide variety of attachments to optimize productivity for every operation. Semi-automatic attachments for example for big bags, pallets, and lumber bundles ensure an efficient and safe operation. Fully automatic attachments for example for handling pipes or pulp bales maximise production with minimal labour. Customised attachments are available on request.

Attachments can be equipped with a fixed rotator or with a separate quick coupling system. In both cases the hydraulic hoses from the machine to the attachment are routed directly through the rotator link. The rotator swivel can be equipped with two to six hydraulic lines and optional electric slip ring
column.

The Mantsinen hydraulic quick coupling enables fast and safe attachment changes. It takes only a few minutes to swap from one attachment and operation to another.



MANTSINEN

AUTOMATIC QUICK COUPLER

The Mantsinen Automatic Quick Coupler (MCA) increases efficiency and safety. It enables a quick change of attachments automatically from the operator's cabin - completed in just two minutes!

The lightweight, cost-efficient and robust solution makes material handling more flexible and faster. The MCA comes in two sizes: smaller MCA30 (SWL 30 t) for Mantsinen 60-160 machines and larger MCA60 (SWL 60 t) for Mantsinen 200 and 300.

Both use the same adapter; you can cross-use attachments for both coupler sizes. Additionally, adding hydraulic, electrical or can-bus connection points allows connecting to a multitude of different attachments.

The MCA can be equipped with hydraulic, electric and can-bus connections. Available as retrofit solution for older machines and attachments.

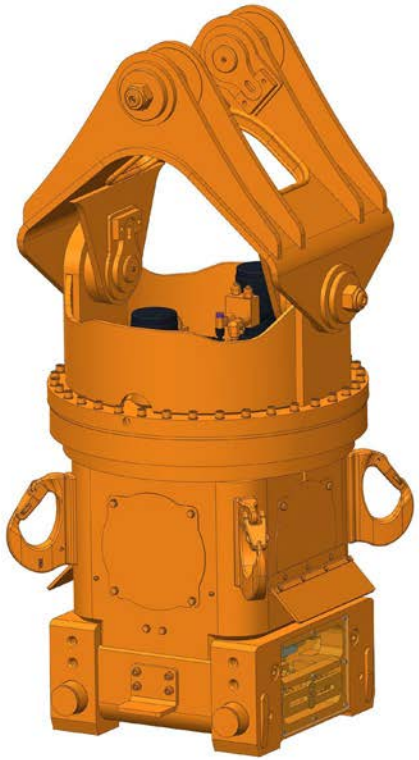

SCAN THE QR CODE AND SEE IT IN ACTION



Utilizing Mantsinen attachments together with the Mantsinen material handling machines provides a clean package minimizing the chances of hydraulic hoses and electrical wires getting snagged during the operation, as all of the connections are routed through the open end of the stick and through the openings on the link and rotator packages.

THE STRONGEST LINK IN THE GLOBAL LOGISTICS CHAIN

Mantsinen provides more efficiency, speed and capacity for our customers in global logistics chain, operating with heavy and basic industry raw materials and semi-finished products. We are the hands-on frontrunner in material handling.

MANTSINEN GROUP LTD OY

Välikankaantie 3, 80400 Ylämylly, Finland | www.mantsinen.com

Edition: 4/2026 EN
Painomateriaali: UPM Finesse silk
Valmistaja: UPM